Circuit Diagram

9K, 12K -110V/60Hz

Indoor Unit

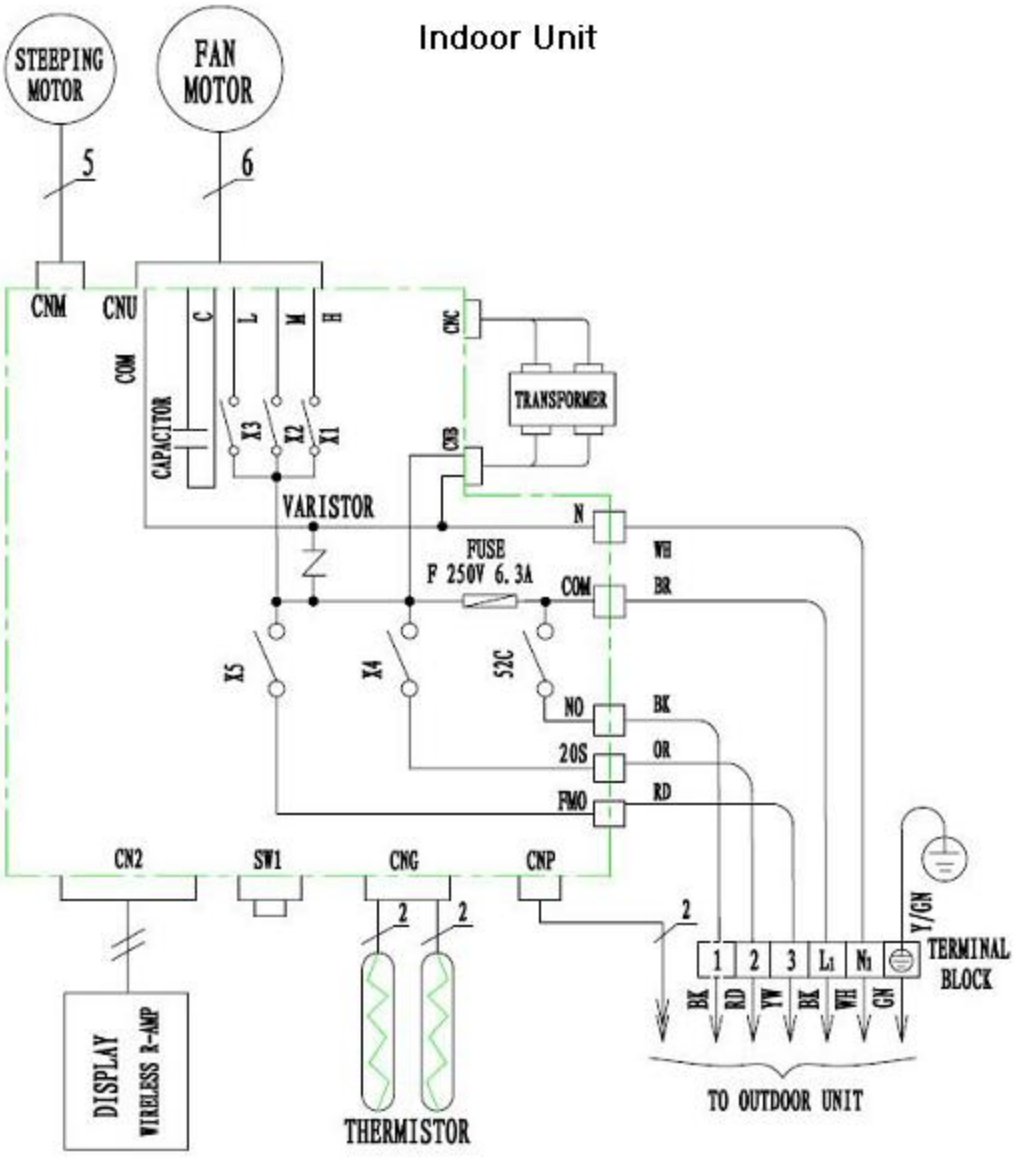

Outdoor

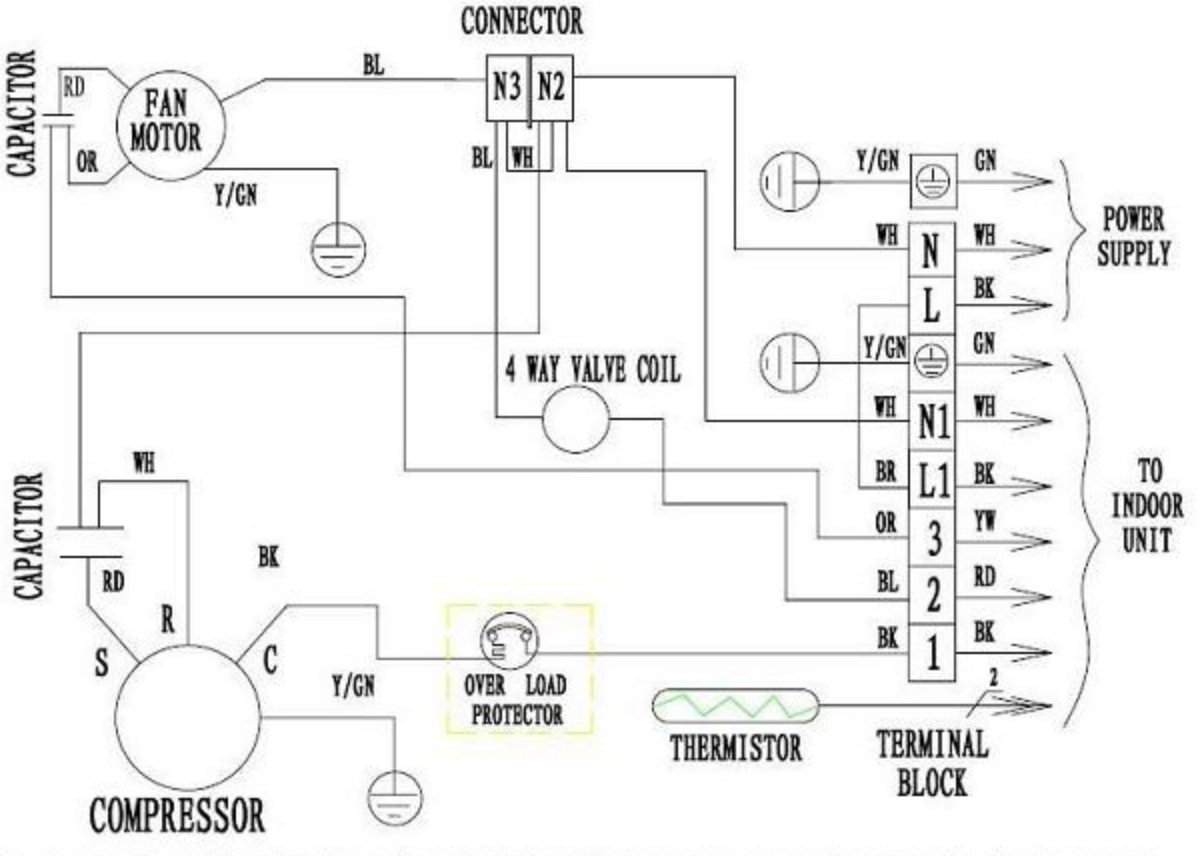

NOTE: IF THE COMPRESSOR WITH OVER LOAD PROTECTOR INSIDE, IT WILL BE WITHOUT THE PART OF BROKEN LINE